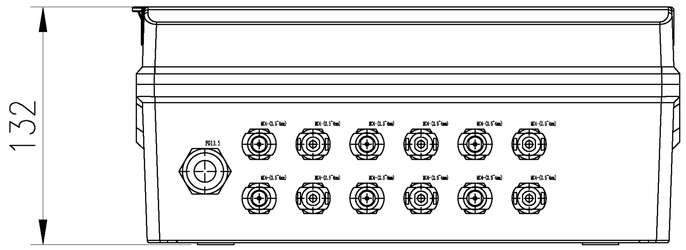

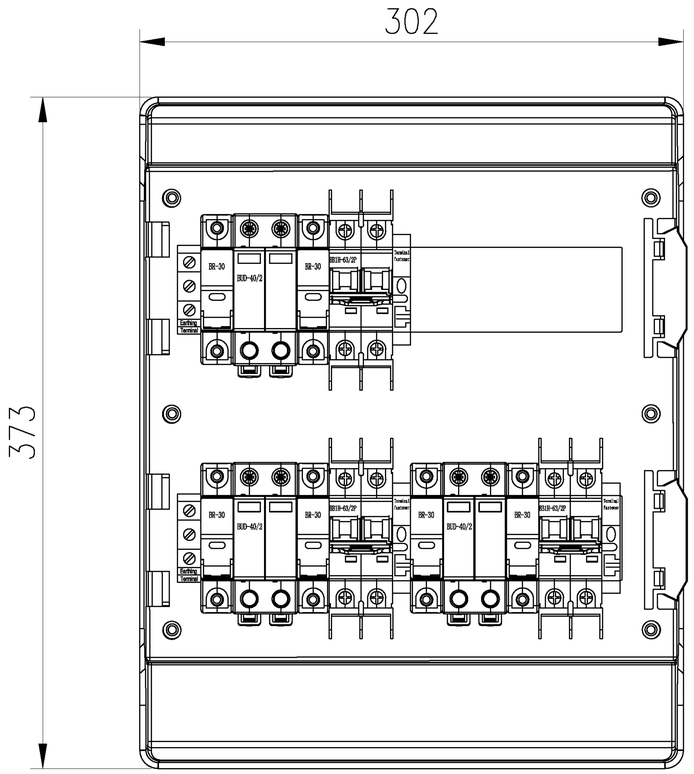

2		CABLE GLAND	PG13.5 SEALING RANGE 6.7-12mm	1	
1		CABLE GLAND	PG9 SEALING RANGE 4-8mm	12	
number	label	The name of the	specifications	quantity	note

The contract no					Tank no		Factory number
					BHS-3/3(DC600V) PV COMBINER BOX		
tag		Change the file no	The signature	The date of			Pattern marker / The proportion
design			standardized		Arrangement diagram		
drawing			Review and approval				
check			approval				
process			The date of				

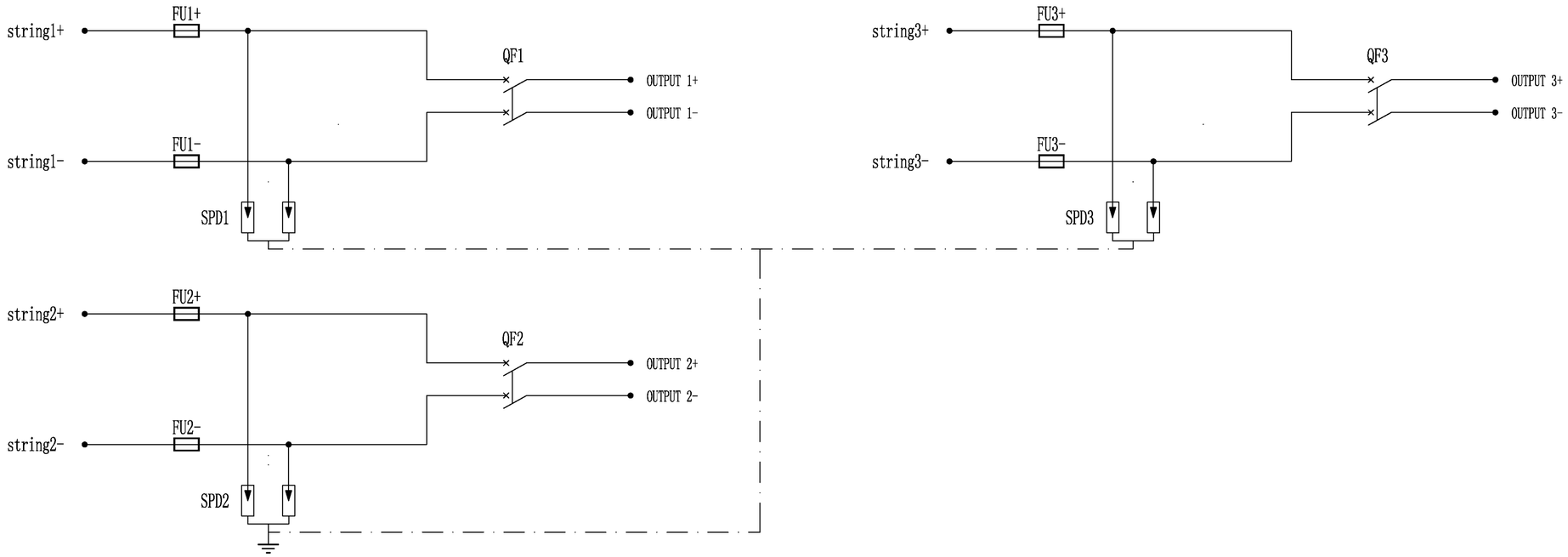

4	QF1-QF2	DC Breaker	BB1-63/2P In=16A DC600V	3	
3	SPD1,SPD2	DC SPD	BUD-40KA/2P DC600V	3	
2		DC Fuse Link	A73.PV15A DC1000V	6	
1	FU	DC Fuse Holder	BR-30/1P 15A DC1000V	6	
number	label	The name of the	specifications	quantity	note

The contract no					Tank no		Factory number
					BHS-3/3(DC600V) DC COMBINER BOX		
tag		Change the file no	The signature	The date of			Pattern marker / The proportion
design		standardized			Schematic diagram		
drawing		Review and approval					
check		approval					
process		The date of					